PLASTICS ENGINEERING COMPANY
SHEBOYGAN, WISCONSIN 53082-0758 U.S.A

3518 LAKESHORE ROAD
POST OFFICE BOX 758
PHONE 920 - 458 - 2121
F A X 920 - 458 - 1923

Thermoset Injection Mold Design Tips

When designing a mold for an injection molded part, it is important to keep in mind that the goal is to produce parts with the best quality, at the best cycle possible, with minimum scrap. To achieve this goal, you will need a mold that has a uniform mold temperature, balanced fill, is properly vented and is designed to dimensionally compensate for material shrinkage in all axis.

Mold Heating

A **uniform mold temperature** means that the temperature of each half of the mold is within +/- 5°F (3°C) for all locations when the mold is heated by oil or steam. Molds that are heated with electric cartridge heaters can vary by as much as 10°F (6°C). A mold with a uniform temperature will fill easier and produce parts with less warpage, improved dimensional stability and have a uniform surface appearance. Achieving a uniform mold temperature is dependent on the method of mold heating.

A mold that is correctly designed and **heated by steam** or **oil** will have a uniform mold temperature because the heat source maintains a constant temperature. However, oil as a heat source is only about half as efficient as steam. Therefore, when using oil to heat a mold, it is necessary to set the oil temperature higher than the desired mold temperature.

Electrically heated molds are more difficult to maintain a uniform temperature because the cartridge heaters are constantly cycling on and off. Heat is generated when the cartridge heaters turn on. This heat must then evenly migrate throughout the tool.

To determine the amount of wattage needed to heat a mold, the use of the following formula might be helpful**: 1.25 – 1.5 kilowatts for every 100 lbs. (45 kg) of mold steel**. Note: This formula typically will allow the mold to be heated to molding temperatures in 1 to 2 hours.

Typically, the **cartridge heaters** are located in the support plates with a distance of 2 ½" (64 mm) between heater cartridges. **NOTE:** Deep draw molds may need to also have cartridge heaters in the retainer plate. There should be a minimum of one **thermocouple** to control each half of the mold. In larger molds, it is recommended to have more than one thermocouple in each mold half. This will result in better control and more uniform mold temperatures. The **thermocouples** should be located in the “A” and “B” plates, between two heaters if possible and at a distance of 1¼" - 1½" (32 mm - 38 mm) from the closest cartridge heater.

This distance is to be measured from the edge of thermocouple hole to the edge of the cartridge heater hole. The distance from the thermocouple to the cartridge heater is important because a cartridge heater that is too close will cause the thermocouple to turn off the heat before the mold is at temperature. A cartridge heater that is too far away from the thermocouple will result in a mold that overheats and then gets too cold. Likewise, it is not a good practice to position a thermocouple so it senses the external surface temperature of the mold. If possible, it should be located a minimum of 1 ½" - 2" (38mm - 51mm) inside the mold, preferably against the cavity block.

Caution should be taken to avoid locating cartridge heaters in deep draw areas of a mold due to the possibility of high mold temperatures due to the close proximity of a cartridge heater.

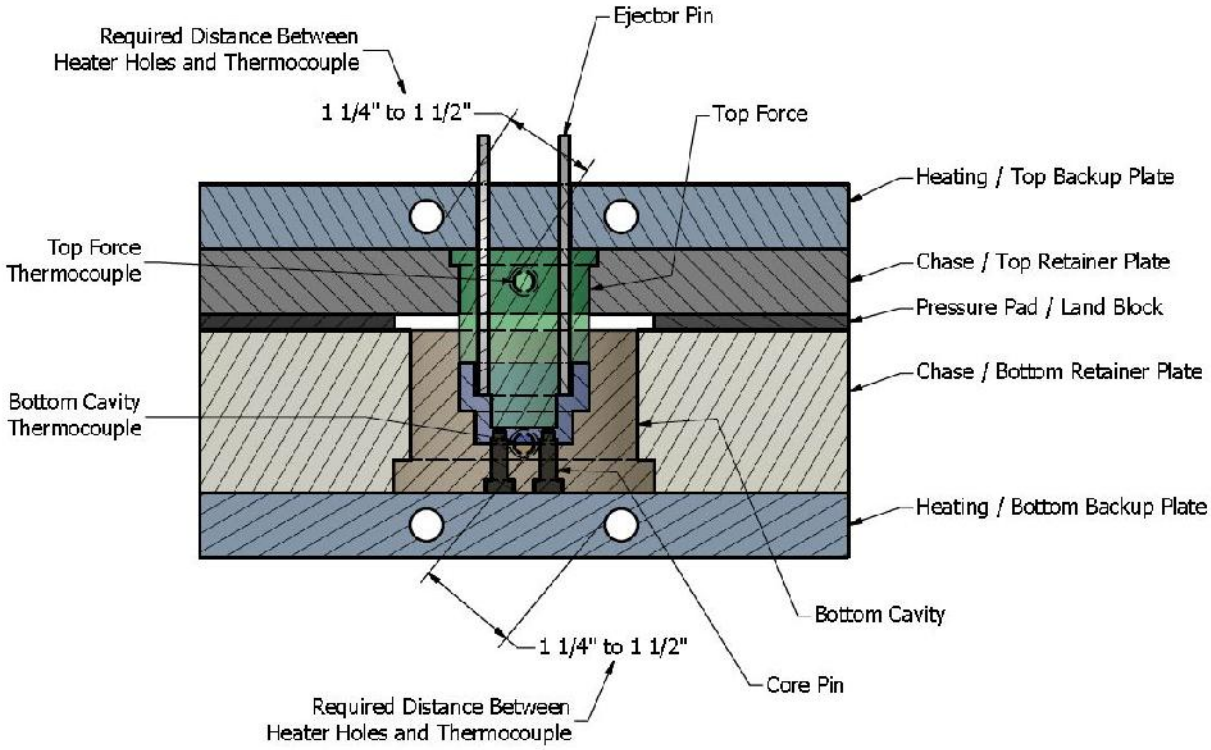

Balance Mold Fill

When injection molding with multiple cavity molds, it is important that all the cavities are filled simultaneously. The most common means to achieve a **balanced fill** is to make the distance the material travels from the sprue to each cavity the same. This approach will work as long as the material flows directly from the sprue to the gate of the part. However, if the runner is divided two or three times in going from the sprue to the gate, it is unlikely that the fill will be balanced. An effective way of **balancing the fill** is to have one main runner that extends from the last cavity on one end of the mold to the last cavity on the opposite end, with sub-runners feeding the individual cavities. To **balance the fill** of the cavities, flow restrictor pins (also called balance or restrictor pins) are placed in the sub-runners typically in the interior cavities. These pins are adjusted to inhibit the flow of material to the individual cavities so all the cavities are filled at the same time. Ejector pins within the runner system are good candidates for restrictor pins.

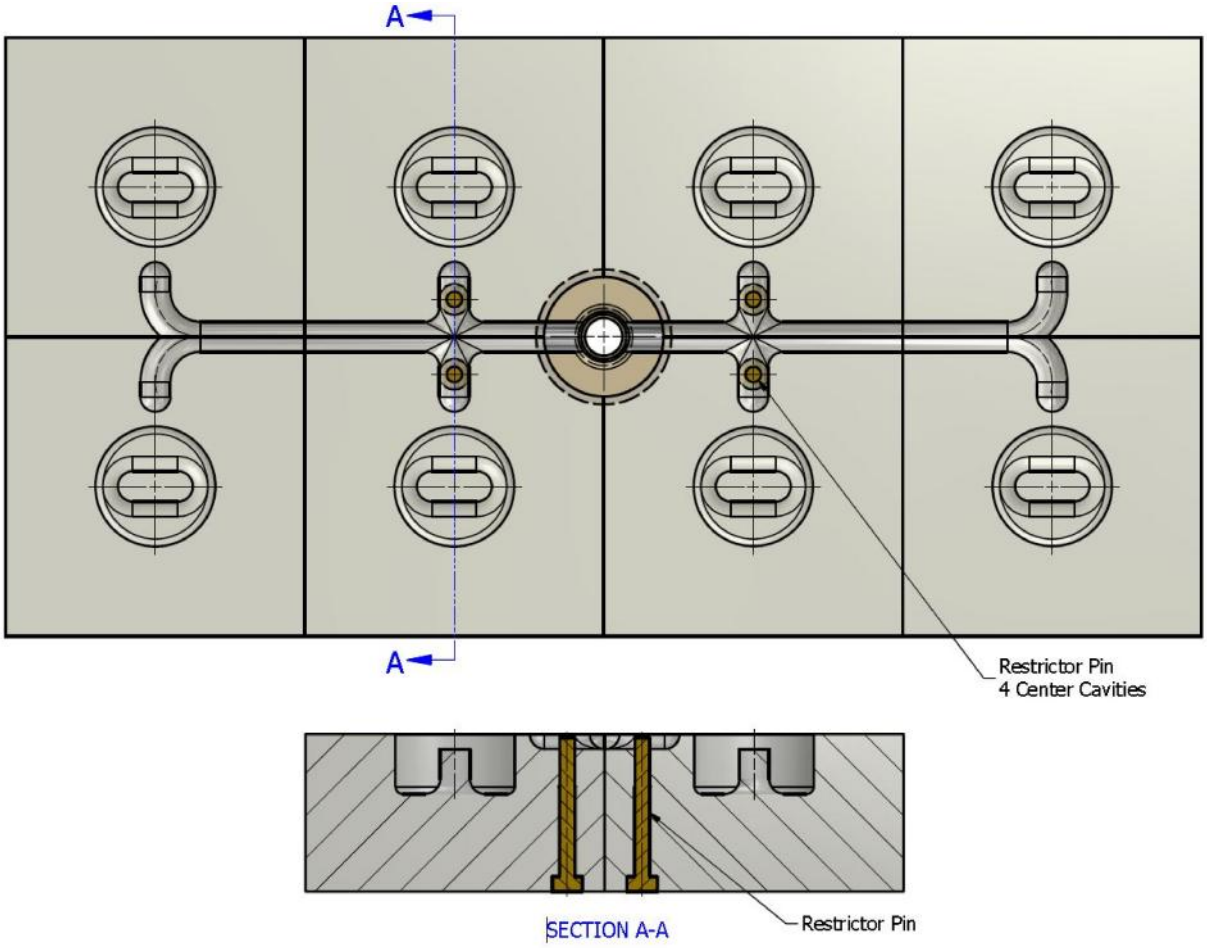

Venting

When molding thermosets, the polymerization process that takes place produces volatiles, which along with the air already within the cavity chamber, can become trapped and superheat to 700°F - 800°F (375°C - 425°C). If the gases are not allowed to escape through the vents, they may oxidize the lubricants leaving **burn marks** on the part. The vents allow the volatiles to escape to atmosphere. In addition to visual problems, improper venting will result in parts that cannot be filled, have dimensional problems or have less than the expected physical and/or electrical strengths.

The first question to be addressed on a new tool is **vent location**. It is important that all vents lead to the atmosphere otherwise the vent will be useless. Unless the part geometry shows some obvious locations for vents, a brief molding trial should be conducted before vents are machined to observe where the gas voids occur. Whenever possible, vents should be located in the movable half of the mold wherever a gas void or knit line is seen on a part. It is suggested to locate vents in a manner that they do not flow in each other.

A typical vent design for a Phenolic Part may have a ¼" (6mm) width with a recommended depth of 0.003" - 0.0035" (0.8 mm - 0.09 mm). **A typical vent design for a Polyester part** may have ¼" (6mm) width and a recommended depth of 0.002" - 0.0025" (0.05 mm - 0.06 mm).
The width is not as critical as is the depth. A vent that is too shallow may seal when the mold is closed. A vent that is normally too deep may not seal, as a result the internal cavity pressure will be low and the optimum molded part properties may not be achieved.

Of equal importance to the location and depth of the vents is **vent length.** This is the distance from the part that the vent maintains its 0.003" (0.08 mm) depth. The vent should be approximately 1" (25 mm) long to allow pressure to build in the cavity after the material in the vent cures. After this point, the vent can be relieved to a depth of 0.01" – 0.02" (0.25 mm - 0.50 mm). To help the vent stay with the part, the corner of the vent at the part edge can be radiused or chamfered.

Something that is often overlooked in venting is the polish. Lack of polishing the vent will cause it to stick to the tool. It is recommended that all vents be **draw polished** in the direction of flow to **at least** the same finish as the cavities and cores. They should be polished for their entire length including the relieved distance. If a mold is to be chrome plated, all the **molding surfaces** should be polished and plated including the vents.

It is sometimes necessary to vent “dead” areas of the mold with **vented ejector pins**. Before adding the vents, an ejector pin should fit the hole in which it will operate within 0.001” (0.025 mm). A flat is then ground on the diameter no deeper than 0.005” (0.13 mm) for a distance that will take the vent 1/8” (3 mm) below the fit length of the pin. Normally, the fit length should be ½” – 5/8” (13 mm - 16 mm). See the drawing below. In addition, the stroke of the ejectors should be long enough for the entire vent plus 1/8” (3 mm) to come up above the bottom of the cavity. This is so the vent can be self- cleaning or so an operator can blow the flash off the pins.

Vented Ejector Pin

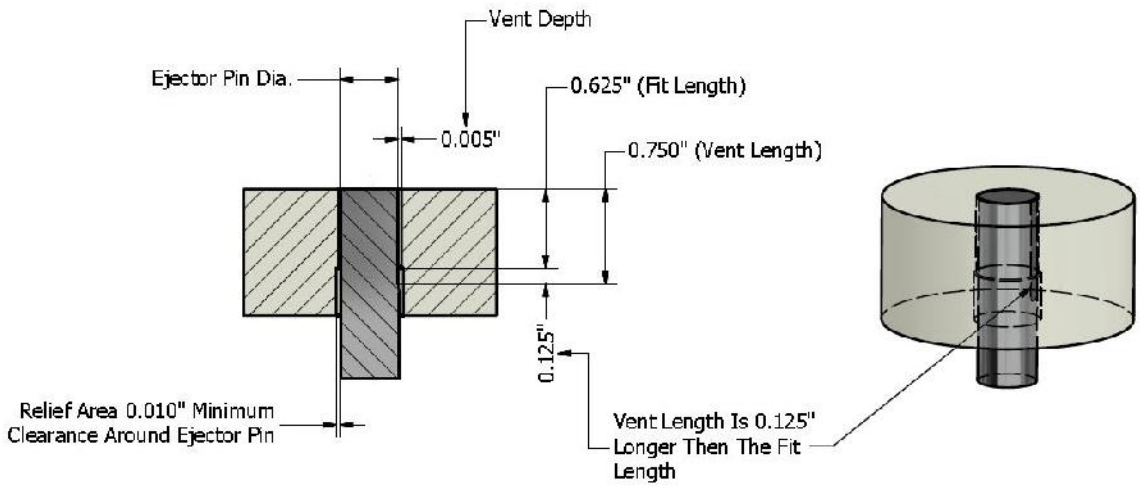

Vacuum Venting

Some part designs are difficult to vent because of "dead pockets" or for other reasons. Also, some materials, such as thermoset polyesters, are difficult to adequately vent using conventional venting methods. In these situations vacuum venting is a good option to consider. However, vacuum venting a tool for molding phenolic materials is not as effective as it is for polyester materials.

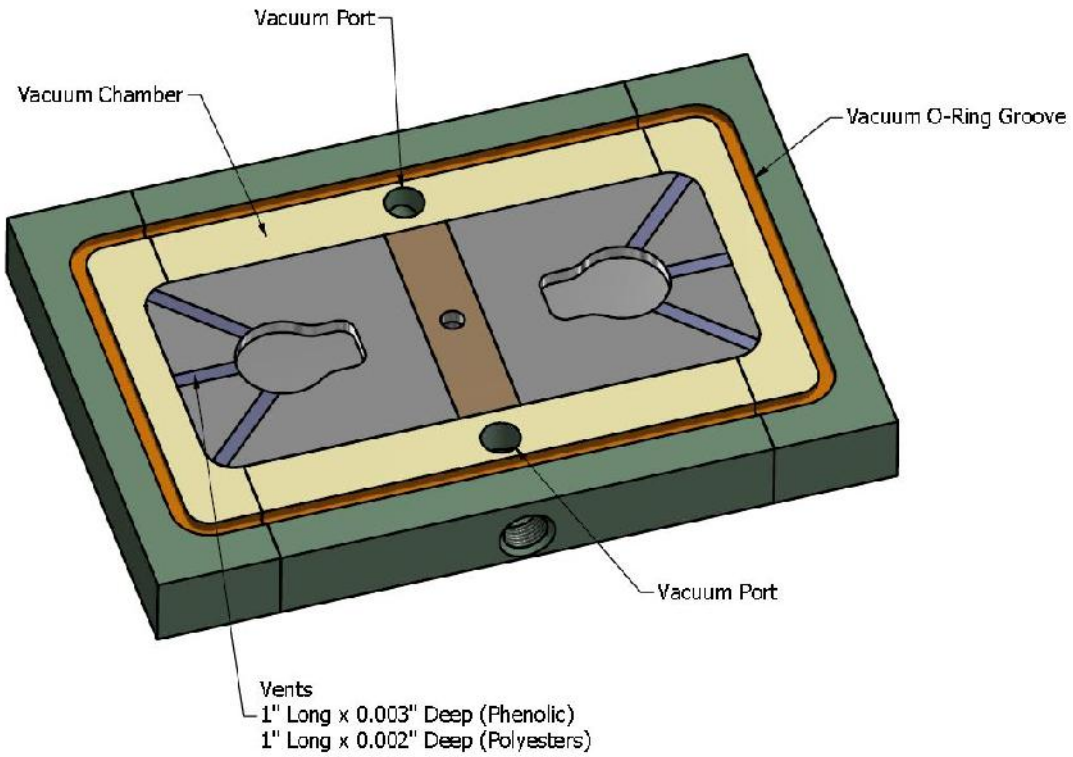

In a vacuum vented mold, the cavities are sealed inside of a vacuum chamber with an O-Ring. A vacuum of at least 21 in. of Hg is then drawn on the cavities. **NOTE:** A Venturi type vacuum pump will **NOT** be able to obtain this level of vacuum in the cavities.

To check the amount of vacuum present in the mold cavities, we suggest closing the mold, putting a vacuum gage over the end of the sprue orifice, activating the vacuum and then timing how long it takes to reach the maximum vacuum reading. This timer information is used to set the injection delay so that once the vacuum is drawn, the molding compound can be injected into the cavities. **NOTE:** Having an accumulator tank in the vacuum system will significantly decrease the amount of time needed to evacuate the cavities.

As can be seen in the above drawing, the vacuum ports are located as far from the vents as possible. This is to prevent material from being drawn through the vents and plugging a vacuum port. The second vacuum port is a back up, in case the original port becomes blocked or plugged. **NOTE:** The vacuum system needs an inline filter between the mold and the vacuum pump, to trap any volatiles which would plug or damage the pump.

An O-Ring material that we have used successfully is high temperature silicone rubber that has a 60 to 70 Durometer hardness. One source of this material is McMaster Carr.

A drawing for an O - ring groove is shown below and is designed to hold the O - ring in place and not have it pulling out of the mold with each shot.

NOTE: The diameter shown in the drawing below is 0.270" (6.9mm). However, other diameters can be used, as long as the proportions of the channel dimensions to the O-Ring dimension are maintained.

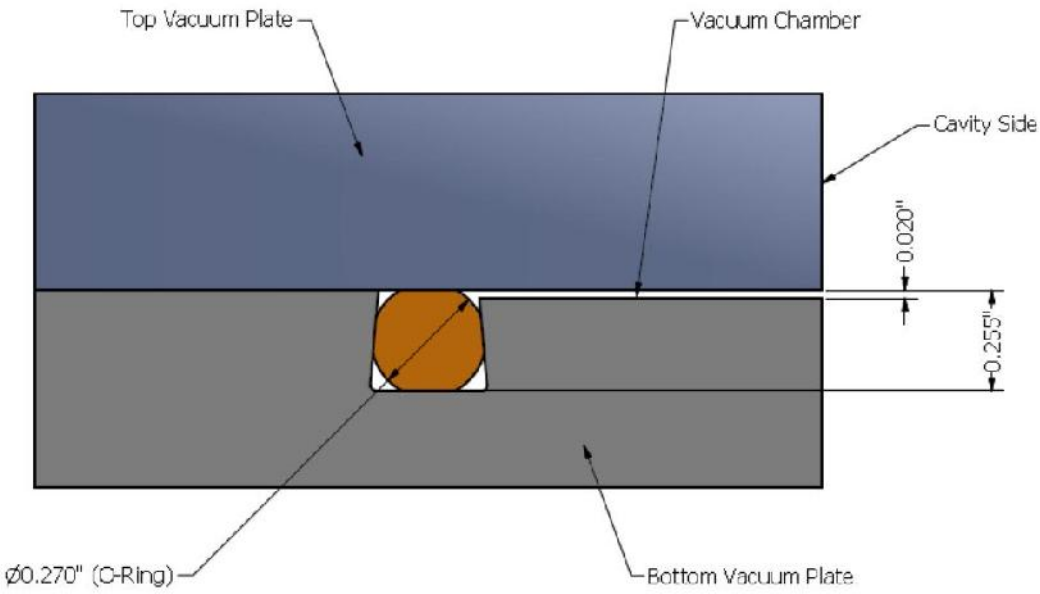

Additional Mold Design Tips

Sprues - The orifice of the sprue bushing must always be larger than the I.D. of the injection nozzle. Normally, the sprue bushing should have an orifice that is $^{1}/_{32}$" (0.8 mm) larger than the press nozzle orifice. This difference in diameters helps the sprue pull out of the nozzle and the stationary half of the mold.

In most cases the spherical radius of the nozzle should match the spherical radius of the sprue bushing. Alignment of the nozzle and sprue bushing can be checked by pinching a piece of paper between them. Care should obviously be taken to not injure ones self or anyone else when conducting this check. In addition to checking the alignment, this same check will tell if the nozzle and sprue bushing are fitting together tightly or if they are damaged and causing leakage.

We suggest that the new molds start out with a sprue bushing orifice of $^{7}/_{32}$" (6 mm) with a corresponding nozzle orifice of 3/16" (5 mm). These diameters are considered fairly small for thermoset materials and forcing the material through these diameters, should produce frictional heat in the material that can help to reduce the overall cycle times. Many times the largest cross section in the mold is found at the base of the sprue bushing. By changing from a typical $^{9}/_{32}$" (7 mm) diameter sprue bushing orifice to the smaller $^{7}/_{32}$" (6 mm) orifice the diameter at the base of the sprue bushing will also be reduced $^{1}/_{16}$" (1.5 mm). A small change like this may result in a cycle time reduction.

Sometimes you will have a significant number of nozzle freeze ups. A possible cause is too much heat being transferred from the mold to the nozzle. With a 330°F (165°C) mold and a 230°F (110°C) nozzle, the natural tendency will be for the mold to heat the nozzle. One way to reduce the heat transfer is to use a nozzle with a ½" (12.7 mm) spherical radius nozzle with a sprue bushing that has a ¾" (19 mm) spherical radius. This reduces the surface area of contact between the nozzle and the mold.

Water cooled sprues can be used to eliminate the scrap if you are molding polyester. However, if molding phenolic or melamine-phenolic parts, using a water cooled sprue may result in frequent nozzle freeze ups.

Sprue bushings typically are only hardened to 43-45 Rc. The runners, cores and cavities of a typical mold for thermoset materials are hardened to a minimum of 52-54 Rc. Because the sprue bushings are relatively soft, they wear out fairly quickly and a worn sprue bushing can cause sprues to stick in the stationary mold half. To improve the wear resistance of sprue bushings used in molds for thermoset materials, we suggest using sprue bushings made out of D-2 steel. These sprue bushings can be hardened to 62 Rc and they will also have a higher chrome content than conventional sprue bushings. Both of these qualities should improve the wear resistance and the release properties of the sprue bushing.

Sprue Pullers - In order to insure that the sprue comes out of the sprue bushing and stays with the runner, a sprue puller is used. As can be seen in the drawing below, a 5° reverse taper on the puller that starts at the runner and extend 5/16” (8 mm) below the runner is recommended. In addition, a small radius approximately 1/16” (1.5 mm) at the junction of the puller and the runner and a larger radius approximately ¼” (6 mm) at the junction of the sprue and the runner is used to help hold the sprue, runner and sprue puller together. The added step on the bottom of the sprue puller is an aid to the removal of the sprue and sprue puller.

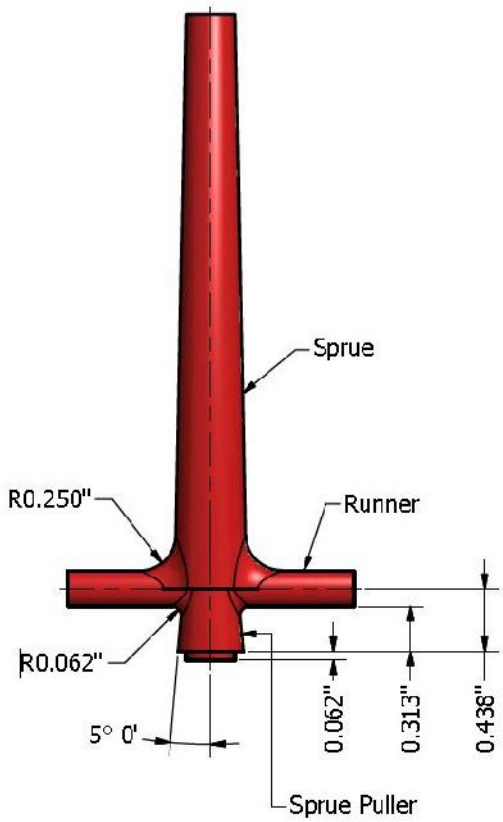

Sprue Bushing Locator Ring

Standard locating rings provide no support for the center of the mold. In some cases it may be necessary to have support in the middle of the stationary side of the mold (i.e. heavy flashing in the center of the mold). Stationary side support can be accomplished by switching to the modified locating ring shown below. This type design allows the center of the stationary side to be "domed", by placing shims under the locator ring.

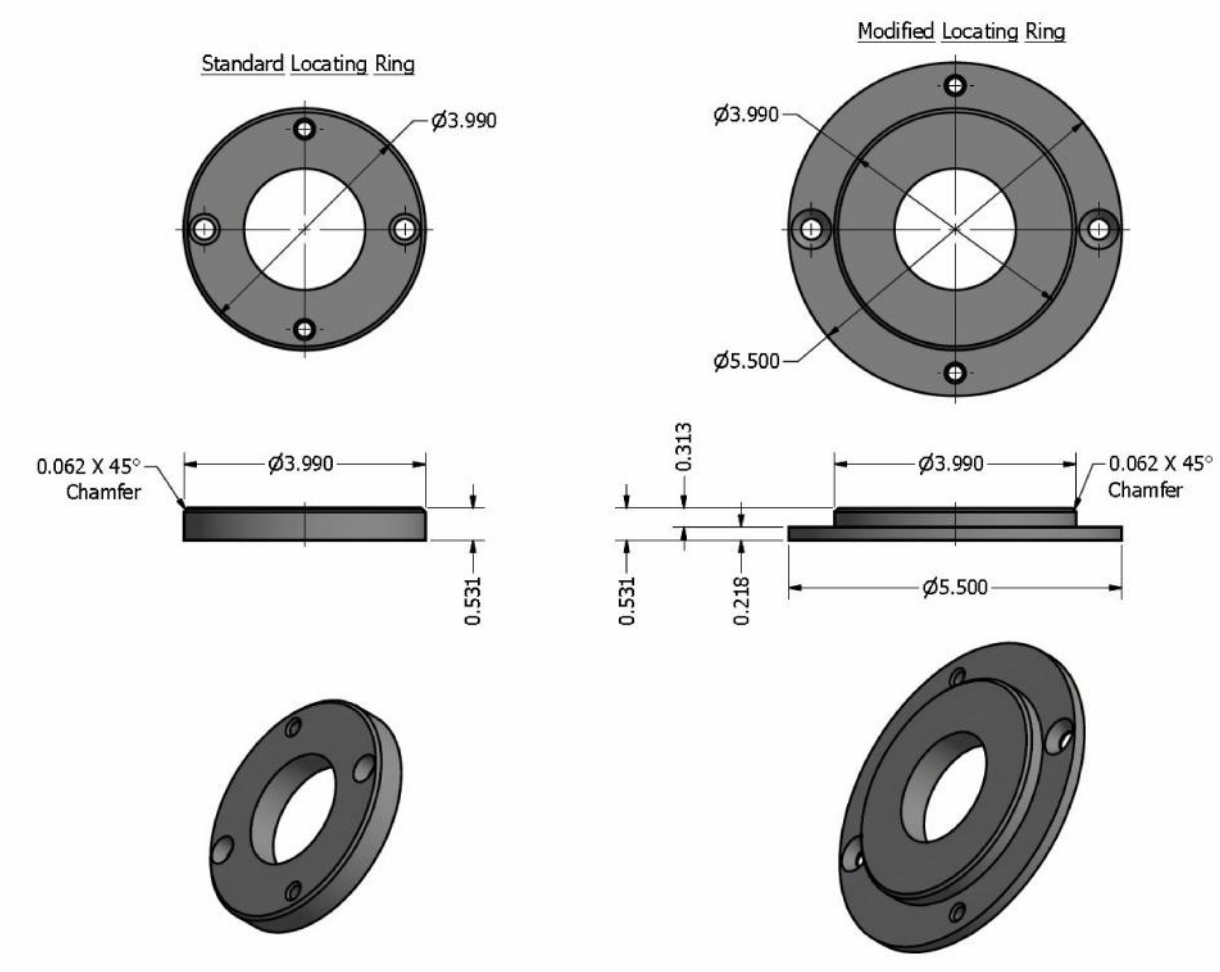

Runner Design

When designing runners for molds, there are a number of possible approaches. These include the standard **full round** with a centerline.

This is the most efficient runner, but in some cases it is necessary for the runner to be in only one half of the mold.

Full Round Runner

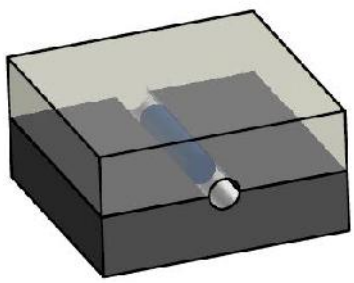

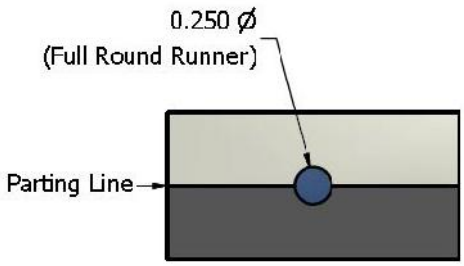

A standard **trapezoid runner** is often used in situations that require the runner to be only in one mold half. The effective runner size is shown in the figure to the left. The four corners become "dead" areas with nearly no material movement.

Standard Trapezoid Runner

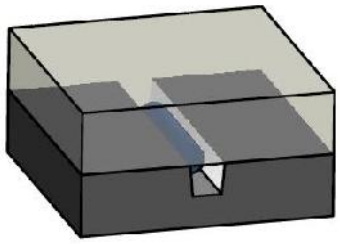

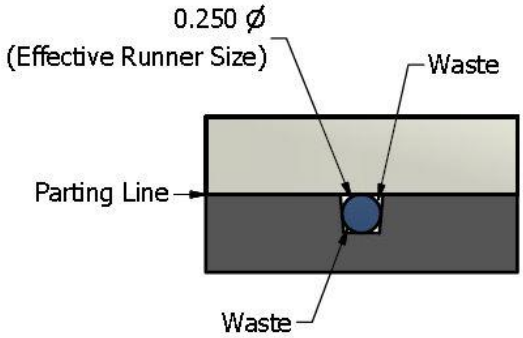

To reduce the amount of scrap in the runner, a **modified trapezoid** runner design is suggested. This design reduces the dead areas without a significant change to the effectiveness of the runner. See the figure to the left.

Modified Trapezoid Runner

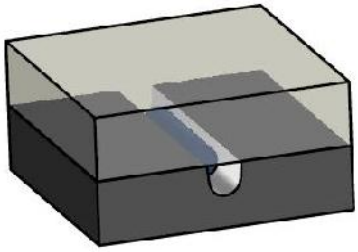

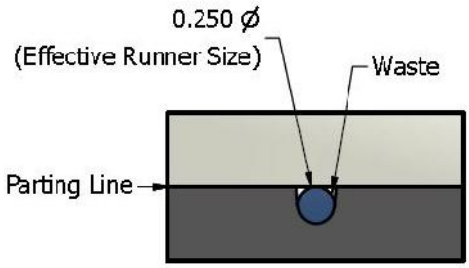

Gates

The gates for thermoset molds are high wear areas of the mold and therefore need to be designed with this thought in mind. The gate should be made using a replaceable insert so when the gate becomes worn it can be easily replaced. A gate should be made of materials that do not wear easily. Materials commonly used for gate inserts are D-2, M-3 and Ferrotic steel.

In addition to inserting the gate, it is beneficial to insert the mold opposite the gate and at the impingement area in the cavity. These areas are also high wear locations and will need some maintenance as the mold is run.

When designing an **edge gate** for thermoset materials, the width of the gate can be as small as 1/16" (1.5mm) but the depth of the gate should not be less than 0.050" (1.3 mm). A gate should be large enough to allow the part to fill within the range of injection pressure and injection time that Plenco suggests in the material's "Injection Molding Startup Procedure" section. Avoid using multiple gates on parts to minimize the number of knit lines. A **knit line** is created when two fronts of material meet. Knit lines are weaker than the rest of the part because there is not as much crosslinking that takes place across the knit as there is in the main body of the part. To keep the overall strength of the parts as high as possible, the number of knit lines should be kept to a minimum.

A second type of gate that is widely used in molds processing thermoset materials is the **subgate**. This type of gate is sometimes referred to as a **tunnel gate**. The advantage of a subgate is it shears off as the part is ejected from the mold. As a result, there is no need for a secondary operation to remove the gate nor, is there any concern that the gate will project out from the part and become an assembly or a visual problem. In addition to the gate removal feature, the subgate can sometimes be designed to direct the flow of material towards a difficult to fill location. In this way, the part can be made easier to fill which can have a positive effect on cycle times and scrap rates. Gate size is dependent on the size of the part. Typically 0.050" (1.3mm) can be used for small parts and 0.080" (2.0mm) for larger parts. There are some problems associated with using sub-gates, which include:

- The tip of the gate breaking off and sticking in the mold. This is especially true for polyester molding materials. The use of sub-gates in molds for polyester parts is not recommended.

- The amount of steel at the parting line above the gate being too thin which results in the metal wearing away very quickly after the mold begins to produce parts.

To reduce the likelihood of the gate tip breaking off and sticking in the mold, the tunnel needs to be well polished so all EDM pits are removed. Locating an ejector pin at least 1-1/2" (38 mm) from the tunnel allows the runner to flex and pull the gate out of the mold without breaking. It is also important to design the tunnel so the angle of incidence with the part allows the gate to pull, but keeps sufficient thickness of steel at the parting line to prevent breakage. See the drawing below for further clarification.

Subgate

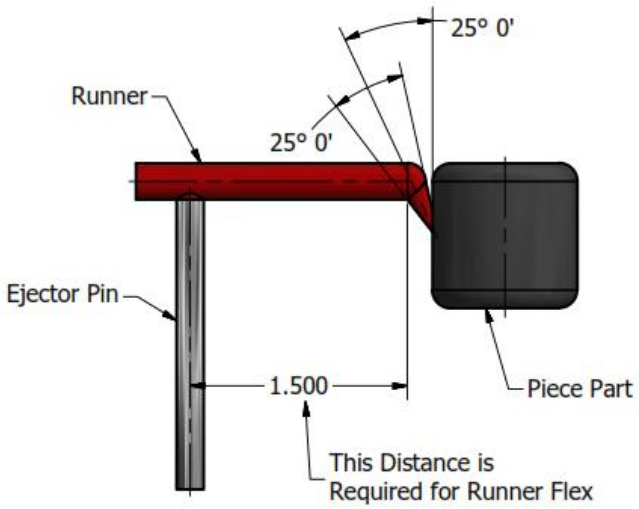

A **gate cutter** can be used to mold a gate with nearly all signs of that gate gone. It is a blade or a pin that is located in the mold directly below the gate. Immediately after the material is injected into the cavity, this blade is advanced forward to seal off the gate. Once the blade is in the forward position, the material cures against it producing the same finish as the rest of the part. The only visible trace of a gate is a witness line. This process requires a modified press control system for the gate cutter sequence.

Cavities and Core - In nearly all molds, the use of **inserted cavities** and **cores** is encouraged. The primary reason for this is in the event of an individual cavity or core becoming damaged, that particular cavity can be removed from the mold and repaired while the rest of the mold is put back into service. Having individual cavities also allows for insert changes that make it possible to run multiple versions of the same basic part simultaneously. When the parts are very small and there are a large number of cavities, individual cavity inserts might not be feasible. In those situations, we would suggest using cavity inserts of 3 or 4 cavities. The materials most commonly used for cavity inserts are H-13 and S-7. Both of these materials will harden to Rockwell 52 to 54 Rc and can be polished to produce an excellent surface finish on the parts.

Ejector Pin Location and Design

Without ejector pins, it is usually not possible to remove the molded part from the mold. The placement of the ejector pins is almost as critical as the location of the gate. The pins should push the part out of the mold without distorting it and without leaving an objectionable mark on the part. A secondary reason for having ejector pins is to aid in the venting of the mold.

Ejector pins should be located in the deepest points of the cavity or core. We specifically suggest that ejector pins be located on the deepest points of ribs and bosses. If ejector pins are not located correctly, the part has to be "pulled" out of the deeper areas or the mold. Parts that have to be "pulled" out of the mold are more likely to stick or be distorted during ejection.

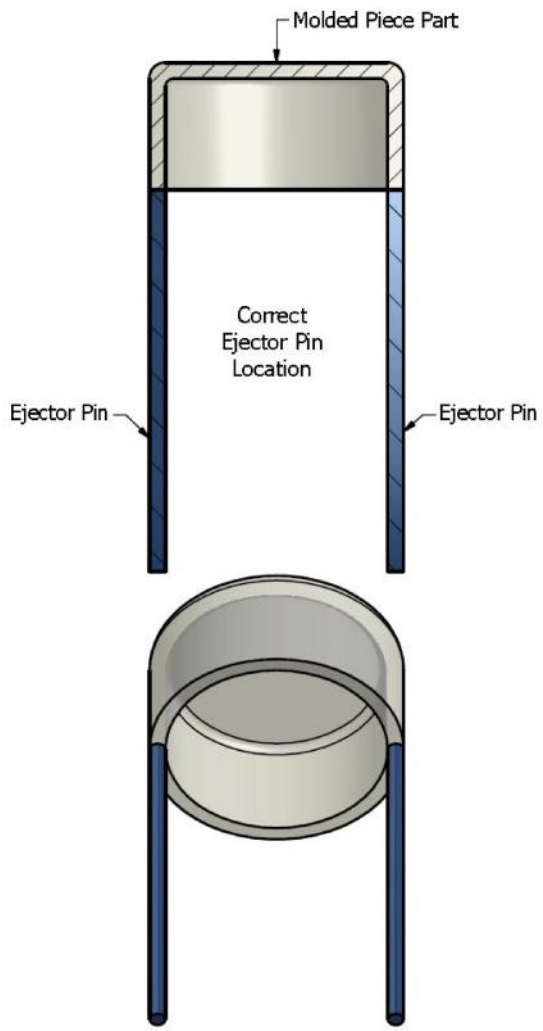

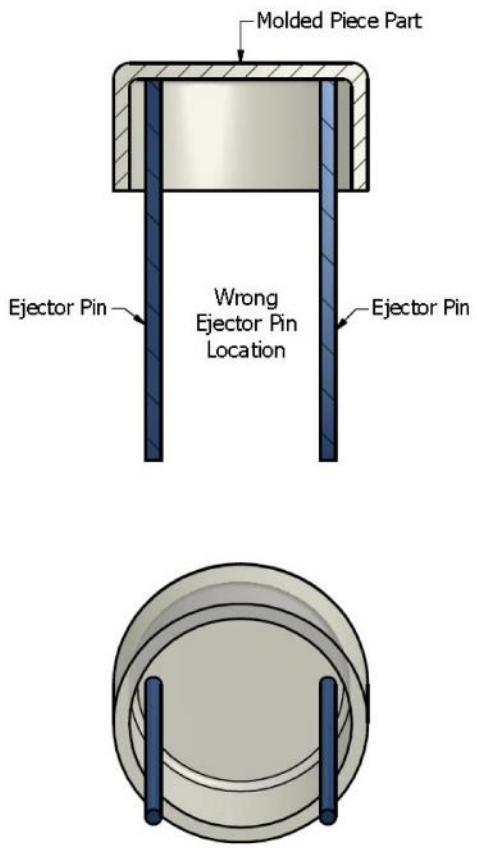

Once the location of the ejector pins is determined, the pin size needs to be decided upon. Very small **diameter ejector pins** can be problematic because of their susceptibility to breaking. Therefore, ejector pins smaller in diameter than 3/32” (2.4 mm) are not recommended. Another common problem is material flowing down around the ejector pin and jamming it so it breaks when the ejectors are actuated. To prevent this from happening, the hole for the pin should only be 0.001" (0.03mm) larger than the pin for a depth of ½” – 5/8” (13 mm - 16 mm) from the cavity. Making it deeper can result in the pin binding and breaking.

To ensure that the ejector plate moves along the centerline of the ejector pins, it is recommended that the mold be equipped with a guided ejector system. In addition to aligning the ejectors, the guided ejector system moves the load of the ejector plate and the retainer plate from the ejector pins to the guide pins and bushings of the ejector system.

While it is desirable to have the ejector pins located on flat surfaces, this is not always possible. It is sometimes necessary to locate ejector pins on contoured surfaces. Ejector pins located on contoured surfaces should be made to match the contour of the cavity. It will be necessary to key these pins so they will maintain their alignment with the contour of the cavity.

Sometimes parts may want to stay in the stationary mold half or a mold designer will install a stationary side ejector system as a precaution. For a compression or transfer mold this is not a problem. However, adding an ejection system to the stationary half of an injection mold can be complicated, since it will add 3” – 4” (76.2mm – 101.6mm) to the height of the mold. Therefore the amount of press daylight will need to be reviewed to make sure the mold can be opened and the parts ejected. A stationary ejector system requires a longer sprue which may increase the overall cycle time.

Polishing and Plating

The trend has been to cut back on **polishing** because of its high cost. Molds are being made that still show cutter marks on the non-visible areas of the parts. While this practice may save money in the construction of the mold, it may increase part costs due to high scrap and down time. The **non-polished areas** will generate frictional heat in the material as it passes over these areas. This added heat can cause the material to cure prior to filling the part. These unpolished areas can change the filling pattern of the material, which can result in gas being trapped in locations that can not be vented. For these reasons it is suggested that all molding surfaces be polished to a minimum of SPI #2 rating. The **mold surfaces to be polished include** the cavities and cores, the vents, the gates, the runners, the sprue and the entire parting line. The reason for polishing the parting line is to insure that any flash that may occur on it will come off of the mold with a minimal amount of effort. When polishing a mold, care should be taken to be sure to always polish in the direction of draw. Vents need to be polished in the direction of material flow and they should have the same degree of polish as the cavity and core. Flat surfaces that have no influence on the removal of the part can be polished in any direction. When polishing deep ribs that were cut using the EDM process, it is important to be sure to polish out **all** of the EDM pit marks. It is necessary to polish all surfaces thoroughly to minimize the potential for part / flash sticking.

Only after the mold is completely polished, it is then ready to be **plated**. Please keep in mind that any defect in the steel surface will not be covered by the plating, but will be accentuated by it. While there are a number of different types of plating available, to date, **chrome plated molds** provide the best part release and with the best part finish. Because some materials have fillers that are incompatible with nickel, the use of nickel or electro less nickel to plate molding surfaces is discouraged. In addition, nickel plating lacks the wear resistance of chrome plating.

The **surfaces to be plated should include** the cores, cavities, core pins, the ends of the ejector pins, runner blocks, vents, and the entire parting line. To protect the molding surfaces and to insure good part release, it is necessary to plate all the surfaces that were polished. After the mold is plated, it will be necessary to polish the chrome because unpolished chrome plating may cause sticking.

Center Supports

Often we find that molds built to run thermoset materials have little or no support in the middle. This will result is heavy flash around the sprue and parts that vary in thickness from the stationary (sprue) side to the movable side. To resolve this problem we suggest installing substantial support pillars down the center of the mold between the parallels 2” (50.8mm) diameter if possible.

Side Locks

We suggest using side locks for all injection molds to maintain the best mold alignment.

Injection-Compression Mold

We suggest the following items be used in designing an Injection/Compression mold. (Also see drawing below)

- The clearance between the cavity and core should be 0.001” – 0.002” (0.03mm – 0.05mm) per side.
- The engagement of the cavity into the core typically is 0.750” (19.1mm).
- The shutoff around each cavity should be 0.001” – 0.002” (0.03mm – 0.05mm).
- The “pancake” thickness typically is 0.006” - 0.008” (0.15mm – 0.20mm).
- Vents should be ground into sidewalls of the force. They should start out at a depth of 0.005” (0.13mm).
- There should be a mismatch in radii between the force and cavity as shown, so the ejector pins have material to push against.
- The ejector pins for the “pancake” should be located around the perimeter for better and more complete flash removal.
- To prevent damaging the parting line around each cavity, landing blocks should be added that have an area equal to the maximum clamp tonnage of the press divided by 5.
- Because of the close fit of the force and cavity, we recommend the use of non-tapered side locks to align the force and cavity.

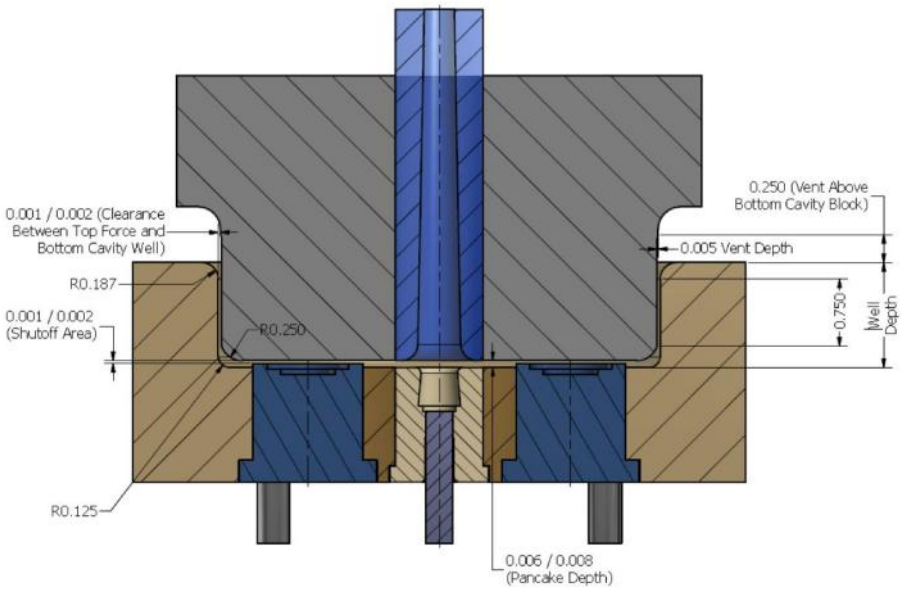

Date Printed: January 30, 2017
Date Revised: January 30, 2017
Supersedes Revision Dated: October 9 2008

This information is suggested as a guide to those interested in processing Plenco Thermoset molding materials. The information presented is for your evaluation and may or may not be compatible for all mold designs, runner systems, press configurations, and material rheology. Please feel free to call Plenco with any questions about PLENCO molding materials or processing and a Technical Service Representative will assist you.